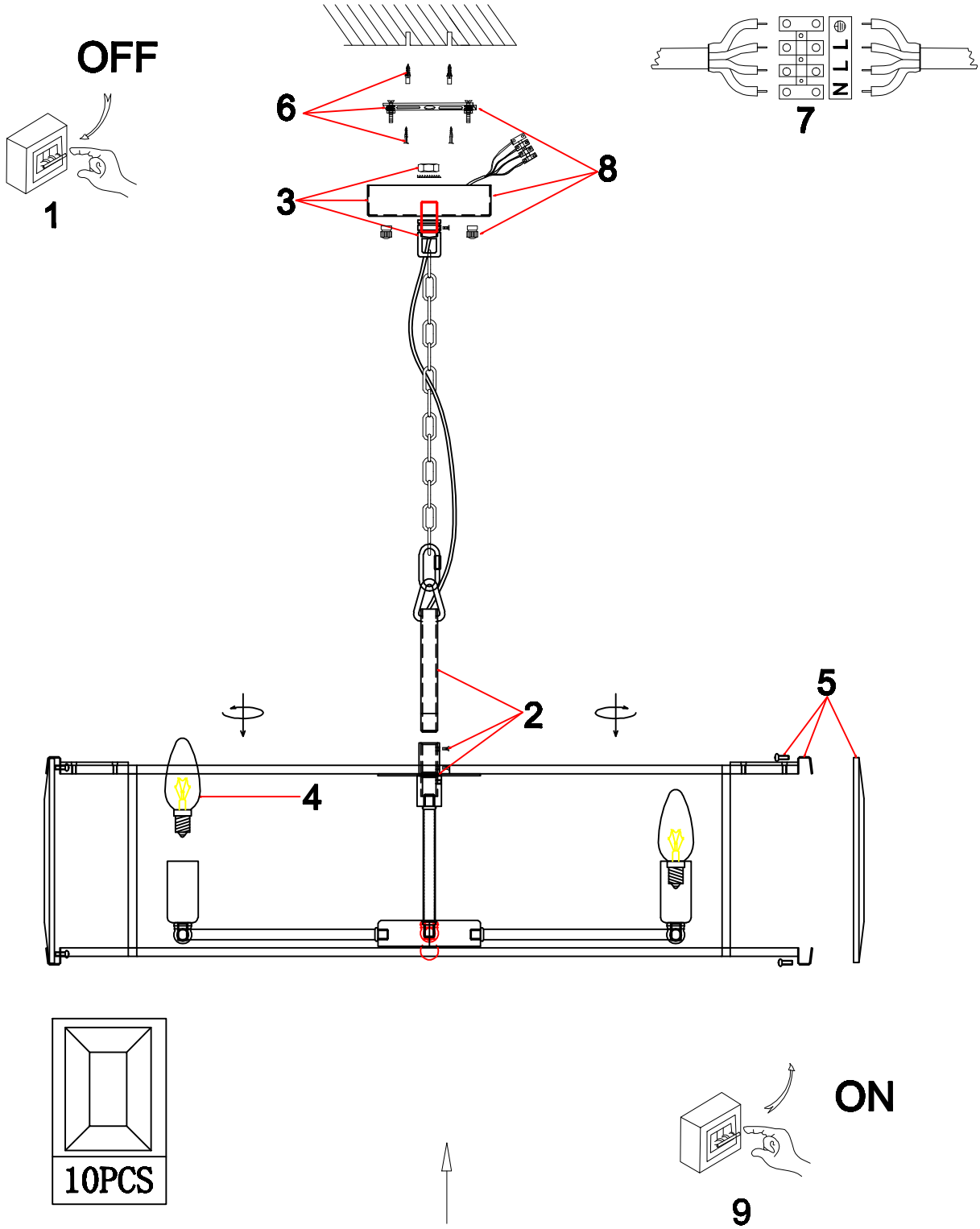
OFF
1
6
3
8
N L L
7
2
5
4
10PCS
ON
9